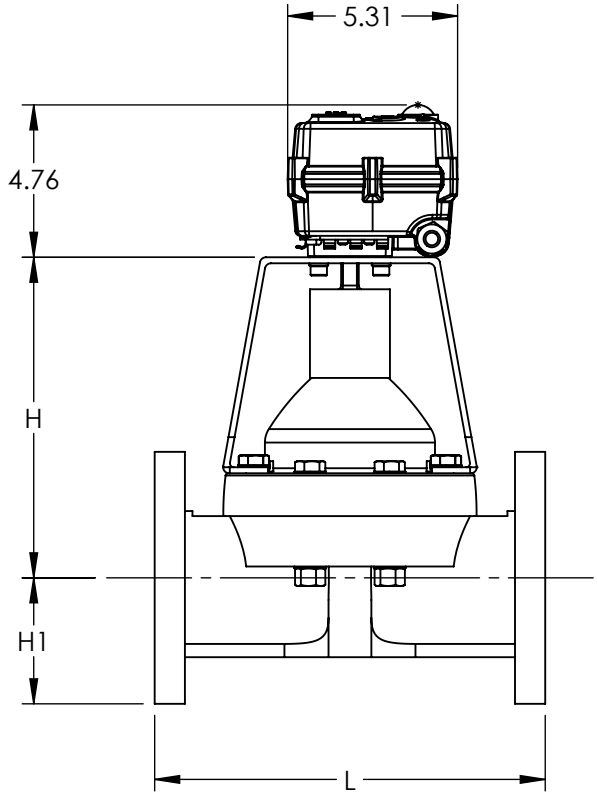

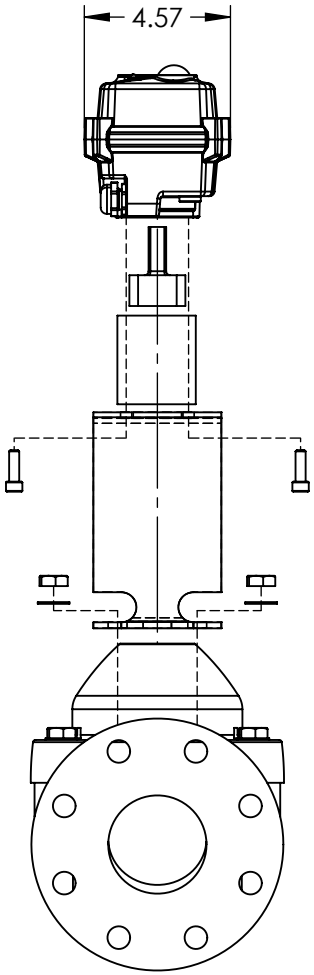

VALVE SIZE	1/2"	3/4"	1"	1-1/4"	1-1/2"	2"	2-1/2"	3"	4"
H	3.65	3.73	3.97	4.11	6.28	6.90	9.52	10.25	11.00
H1	1.75	1.94	2.12	2.31	2.50	3.00	3.50	3.75	4.50
L	4.25	5.88	5.88	6.38	6.94	7.94	9.84	10.38	12.94
MODEL	S50MT	S50MT	S50MT	S50MT	S50MT	S50MT	S50MT	S50MT	S50MT